BONALDO

Isabey desk

Designer: Gabriele & Oscar Buratti



Isabey desk is a furnishing piece defined by the tubular structure of its base, which recalls paired columns, a distinctive architectural element of classical tradition. The interplay between the solid volumes of the top and the lighter presence of the base creates a balance between mass and lightness, stability and suspension. This architectural reference becomes a statement of intent, expressing a desire to create a shared and authoritative language capable of withstanding the passage of time.
The rectangular top, with softened corners, is available in wood, Canaletto walnut, brown oak, charcoal oak and grey oak, combined with a range of finishes for the metal base.

Data sheet

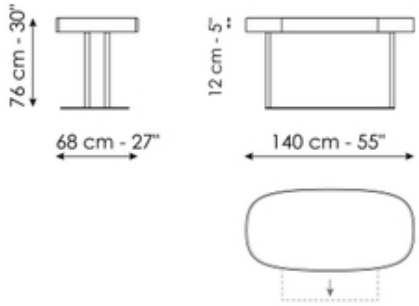

Isabey desk

Width: 140cm

Depth: 68cm

Height: 76cm

Finishes

Top



Veneered wood
Walnut Canaletto



Veneered wood
Coal oak



Veneered wood
Brown oak



Veneered wood
Grey oak

Base



Painted metal
Mat lead



Painted metal
Mat bronze



Metal finish
Clouded chrome



Metal finish
Bright nickel



Metal finish
Brown nickel



Metal finish
Champagne nickel



Metal finish
Dark nickel

Materials, fabrics, leathers, colors and finishes are approximate and may slightly differ from actual ones. You can find the complete collection of Bonaldo fabrics and leathers on the website https://bonaldo.biz