BONALDO

Amour

Designer: Fabrice Berrux



Conceived as a sculptural seat with generous proportions, the Amour armchair, designed by Fabrice Berrux for Bonaldo, embodies a vision in which design takes center stage: form, material, and function become true statements of intent.
Both enveloping and open, its design evokes a simple, universal gesture: welcome. Defined by continuous, soft, flowing lines, Amour expresses the idea of comfort through the language of design, transforming it into a visual and sensory experience.
The backrest opens like a protective shell, while the generously proportioned, slightly elongated seat invites natural, effortless relaxation. The absence of sharp angles reflects a deliberate design choice: every curve is carefully calibrated to achieve a harmonious balance between formal elegance and ergonomic well-being.
The compact cylindrical swivel base creates an architectural contrast with the soft, enveloping shell. This element grounds the armchair in the space, reinforcing its presence while preserving a sense of visual lightness. The volumes appear suspended, striking a refined balance between structure and fluid form.
Poised between a piece of furniture and a contemporary sculpture, the Amour armchair makes a striking visual statement. It does more than simply furnish a space: it interprets and defines it, engaging in an ongoing dialogue with its surroundings.
Amour embodies Bonaldo's vision of design as a cultural value and sensory experience.
To quote Fabrice Berrux: “I imagined it as a silent, complicit smile. Empty, it promises. Filled, it keeps its word. Amour, se vit.”

Data sheet

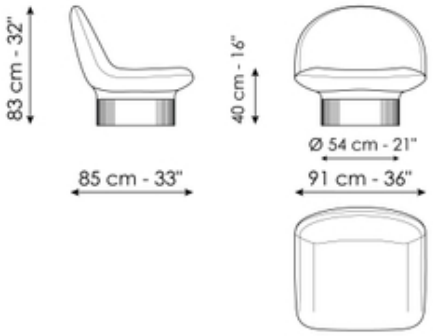

Amour

Width: 91cm

Depth: 85cm

Height: 83cm

Finishes

Swivel base

Painted metal
Mat white

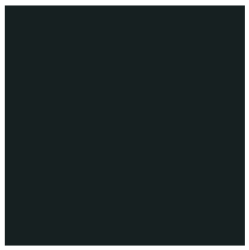

Painted metal
Mat black



Painted metal
Mat dove grey



Painted metal
Supreme anthracite



Painted metal
Mat lead



Painted metal
Mat bronze



Painted metal
Mat pearl gold



Painted metal
Mat brass



Painted metal
Mat copper



Metal finish
Clouded chrome



Metal finish
Bright nickel



Metal finish
Brown nickel



Metal finish
Champagne nickel



Metal finish
Dark nickel

Materials, fabrics, leathers, colors and finishes are approximate and may slightly differ from actual ones. You can find the complete collection of Bonaldo fabrics and leathers on the website https://bonaldo.biz