BONALDO

Moneypenny

Designer: Mauro Lipparini



The Moneypenny chests of drawers are discreet and indispensable allies in all office areas, since they allow documents to be stored with care and confidentiality, just like the efficient assistant Miss Moneypenny in the James Bond film series.
Moneypenny is also an excellent satellite container, both used alone or combined with a desk, boasting a refined aesthetic that is typical of its formal and design synthesis. The simplicity of the design of the chest of drawers presents an elegant curved wooden cylinder which, when combined with the sliding mechanical efficiency of the large integrated drawers, makes it a versatile piece of furniture perfect for any environment, from the professional office to the home office and from the living room to the sleeping area. A version with castors is also available, perfect as a support surface that can be easily moved and ready for use whenever needed.





Data sheet

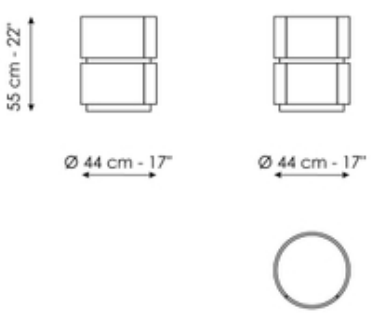

Moneypenny high

Width: 44cm

Depth: 44cm

Height: 55cm

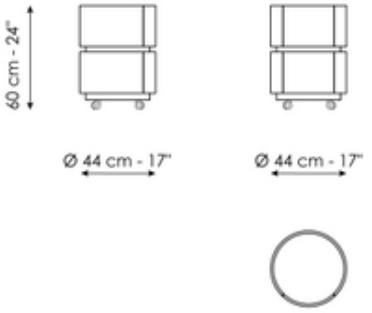

Moneypenny high

Width: 44cm

Depth: 44cm

Height: 60cm

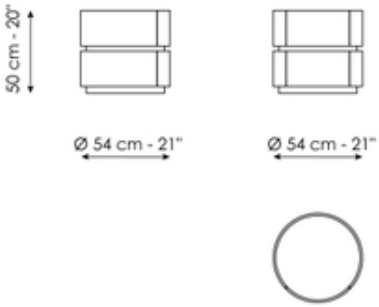

Moneypenny low

Width: 54cm

Depth: 54cm

Height: 50cm

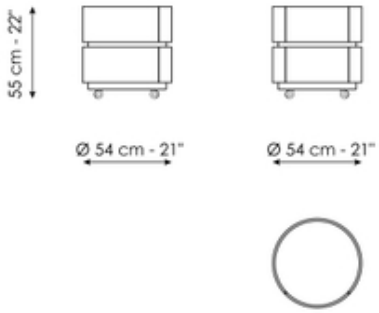

Moneypenny low

Width: 54cm

Depth: 54cm

Height: 55cm

Finishes

Frame



Veneered wood
Walnut Canaletto



Veneered wood
Brushed coal oak

Top and base



Lacquered wood
Mat bronze



Lacquered wood
Mat lead

Materials, fabrics, leathers, colors and finishes are approximate and may slightly differ from actual ones. You can find the complete collection of Bonaldo fabrics and leathers on the website https://bonaldo.biz